FORM MS-4472-82
REPLACES FORM MS-4472-12
FILE IN SECT. 2 OF SERVICE MANUAL

Illustrated Parts List

MODEL SERIES

100902 To 100993

TYPE NUMBERS
0010 through 0040
0110 through 0347
400000 through 400108

TO FIND
THE CORRECT NUMBER OF THE PART YOU NEED:
FOLLOW THE INSTRUCTIONS BELOW.

A. Refer to Engine Model, Type and Code Number (formerly Serial Number) that is stamped on the blower housing or name plate of engine. (Engine type numbers such as 400108 are listed complete. Engine type numbers such as 0147 01 are listed herein only as 0147. The two digits (01 or 02, etc.) to the right of the space are not needed for parts identification). Then use the Illustrated Parts List covering these Model Series.

B. Refer to Illustrated Parts section and compare the old part with illustration. The number on the illustration is the Reference Number. Assemblies include all parts shown in frames. All parts shown in assembly frames on which individual reference numbers are given can be purchased separately.

C. After the Reference Number has been identified, refer to the Numerical Parts List, where Reference and Master Part Numbers are listed. THE MASTER PART IS USED ON ALL TYPE NUMBERS EXCEPT THOSE TYPE NUMBERS UNDER "NOTE".

D. If a "Note" appears below the Master Part Number, this means that this part differs from the Master Part for certain types. If the Type Number is listed under "Note", order the part referred to.

E. If the Engine Type Number does not appear after any part number listed under "Note", use the Master Part Number.

F. For Type Numbers higher than those covered by this book, please refer to the factory if you are unable to identify the part by comparison.

ORIGINAL
BRIGGS & STRATTON
SERVICE PARTS ®

100902 To 100993

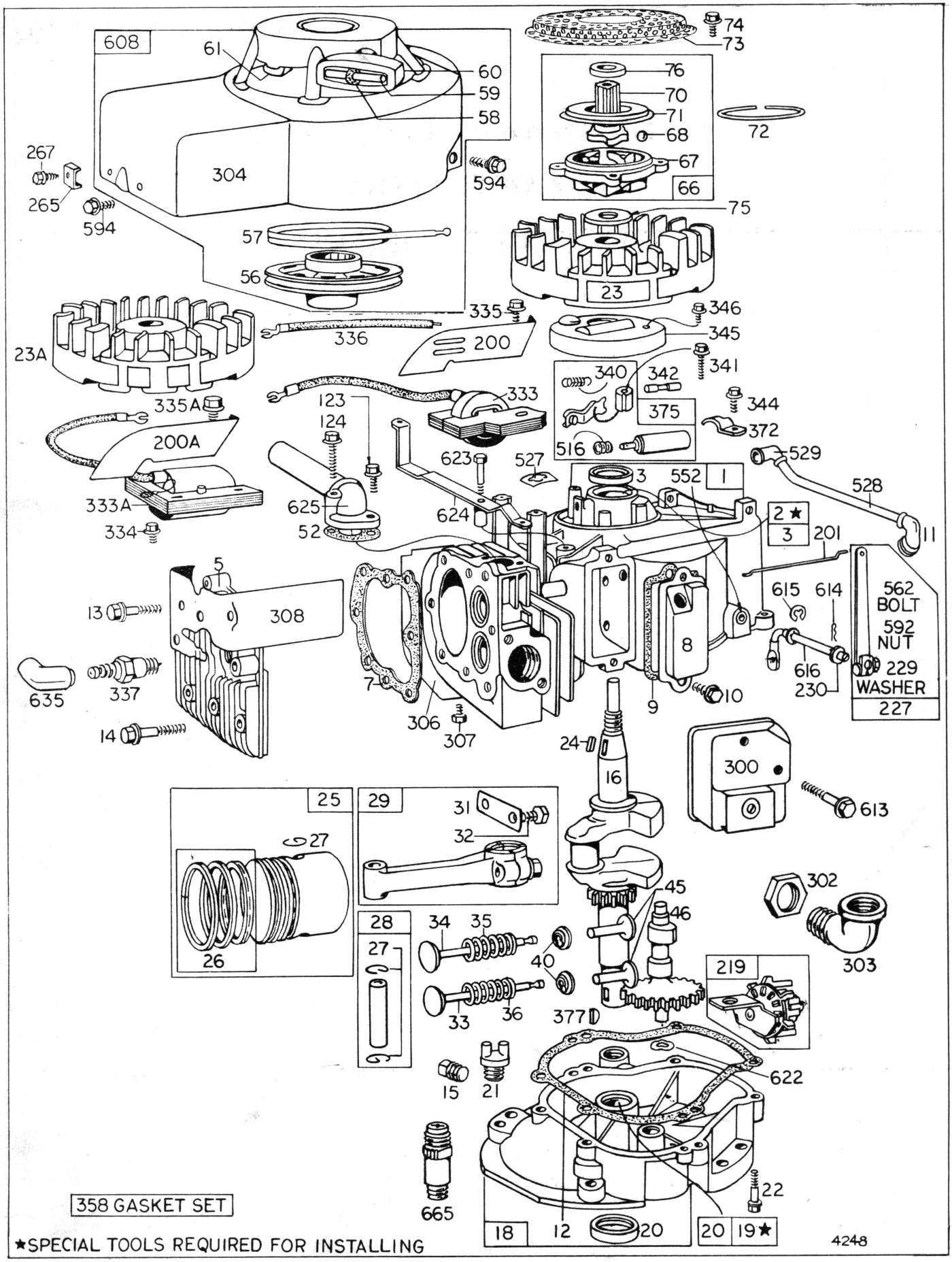

Assemblies include all parts shown in frames.

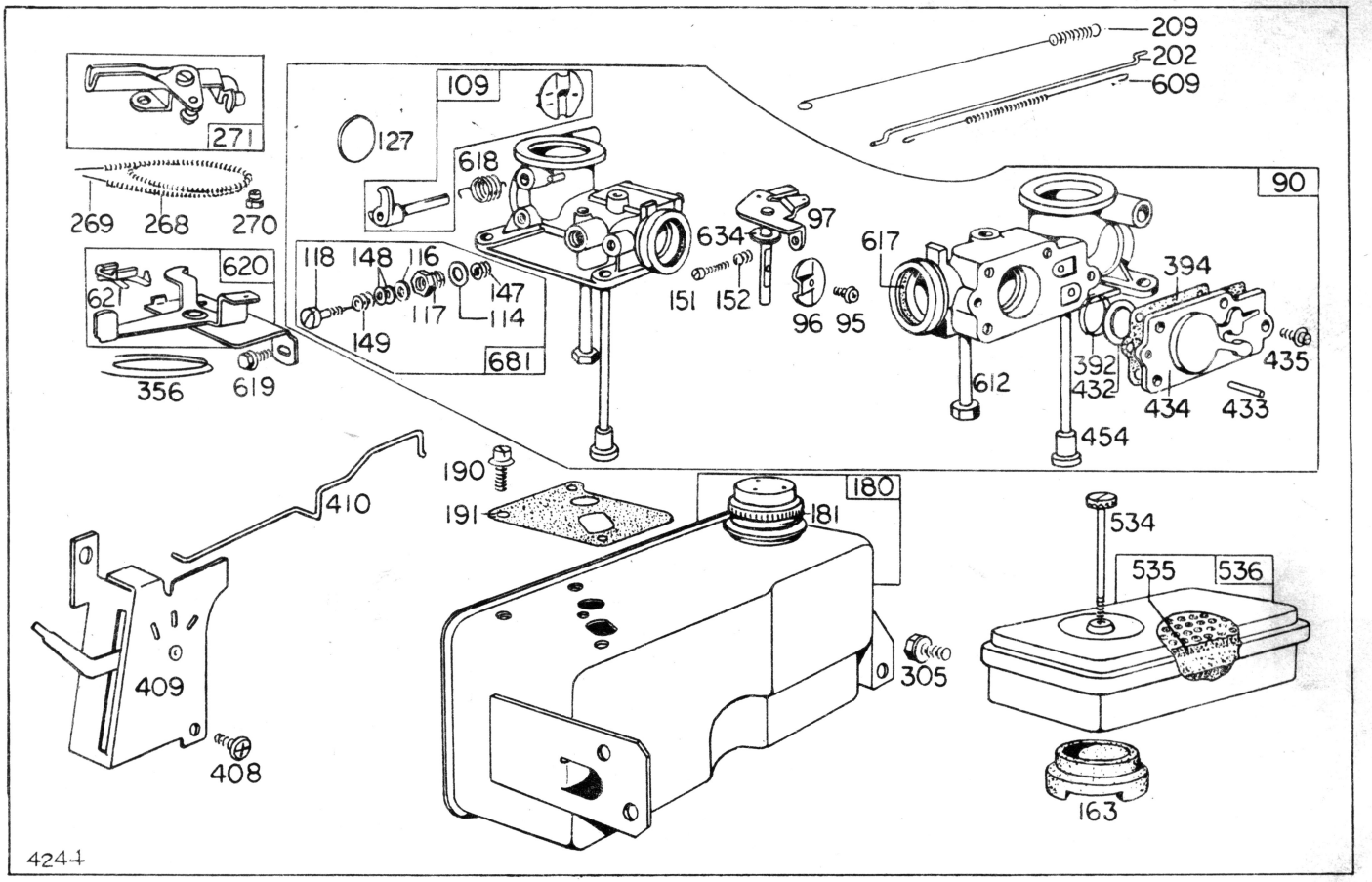

Assemblies include all parts shown in frames.

REF. NO.	PART NO.	DESCRIPTION
1	**297564**	Cylinder Assembly
2	**297565**	Bushing–Cylinder
	Note:	Requires special tools for installation.
3	**89660**	Seal–Oil
5	**211127**	Head–Cylinder
7	***270383**	Gasket–Cyl. Head
8	**297261**	Breather–Valve Chamber
9	***27549**	Gasket–Valve Cover
10	**93394**	Screw–Breather Mounting Sem
11	**67738**	Grommet–Breather
12	***270069**	Gasket–Crankcase–.015" thick (Standard)
	270122	Gasket–Crankcase–.005" thick
	270123	Gasket–Crankcase–.009" thick
13	**93368**	Screw–Cyl. Head (2-3/32" long)
14	**93369**	Screw–Cyl. Head (2-15/32" long)
15	**91084**	Plug–Oil Drain
	Note:	**93418** Plug–Oil Drain (Hexagon Socket Head) Used on type Nos. 0133, 0138, 0148, 0152, 0159, 0165, 0168, 0173, 0195, 0198, 0202, 0203, 0225, 0235, 0269, 0275, 0277, 0280, 0281, 0286, 0287, 0290, 0291, 0293, 0303, 0305, 0306, 0307, 0316, 0323, 0324, 400027, 400044, 400045, 400065, 400066, 400074, 400075, 400076, 400080, 400081, 400098, 400099.
16	**260646**	Crankshaft
	Note:	**260650** Crankshaft Used on type Nos. 0015, 0111, 0116, 0121, 0124, 0130, 0131, 0134, 0139, 0140, 0144, 0145, 0146, 0147, 0149, 0156, 0161, 0166, 0170, 0176, 0181, 0183, 0185, 0200, 0201, 0203, 0217, 0223, 0224, 0225, 0229, 0230, 0242, 0248, 0258, 0267, 0268, 0272, 0273, 0276, 0281, 0286, 0296 0298, 0299, 0300, 0309, 0313, 0318, 0320, 0321, 0322, 0326, 0327, 0330, 0331, 0332, 0335, 0336, 0346, 0347, 400016, 400023, 400024, 400026, 400027, 400028, 400033, 400038, 400042, 400043, 400049, 400057,

* Included in Gasket Set–Part No. 297616

REF. NO.	PART NO.	DESCRIPTION
		400062, 400064, 400065, 400066, 400068, 400077, 400082, 400092, 400095, 400096, 400101, 400105. **260826** Crankshaft Used on type Nos. 0137, 0197, 0319, 400085. **260908** Crankshaft Used on type Nos. 0017, 0112, 0117, 0122, 0125, 0132, 0143, 0148, 0150, 0151, 0152, 0153, 0157, 0159, 0164, 0167, 0168, 0171, 0173, 0175, 0177, 0179, 0180, 0186, 0187, 0191, 0194, 0202, 0211, 0214, 0215, 0219, 0221, 0226, 0227, 0233, 0235, 0236, 0243, 0244, 0246, 0247, 0251, 0252, 0257, 0260, 0262, 0266, 0271, 0274, 0275, 0279, 0283, 0285, 0288, 0289, 0290, 0293, 0294, 0295, 0297, 0303, 0304, 0307, 0310, 0317, 0324, 0328, 0329, 0333, 0334, 0337, 0338, 0339, 0341, 0342, 0344, 0345, 400017, 400036, 400044, 400045, 400047, 400048, 400051, 400054, 400056, 400061, 400063, 400069, 400071, 400074, 400078, 400079, 400081, 400083, 400087, 400089, 400094, 400097, 400099, 400102, 400104, 400106, 400108.
		260996 Crankshaft Used on type Nos. 0287, 0291, 0305, 0306.
18	**297587**	Sump–Oil
	Note:	**298211** Sump–Oil Used on type Nos. 0040, 0120, 0121, 0122, 0123, 0124, 0125, 0133, 0156, 0160, 0163, 0169, 0182, 0204, 0209, 0212, 0216, 0227, 0234, 0240, 0241, 0247, 0259, 0265, 0270, 0282, 0301, 0310, 0319, 0330, 0332, 0334, 0339, 0342, 400100, 400101, 400102.
19	**297604**	Bushing–Oil Sump
	Note:	Requires special tools for installation.
20	**294167**	Seal–Oil
	Note:	**298041** Seal–Oil (For Auxiliary Drive Shaft) Used on type Nos. 0040, 0120, 0121, 0122, 0123, 0124, 0125, 0133, 0156, 0160, 0163, 0169, 0182, 0204, 0209, 0212, 0216, 0227, 0234, 0240, 0241, 0247, 0259, 0265, 0270, 0282, 0301, 0310, 0319, 0330, 0332, 0334, 0339, 0342, 400100, 400101, 400102.
21	**66768**	Plug–Oil Filler
	Note:	**298715** Tube Assy.–Oil Filler Used on type Nos. 0239, 0286, 0343. Includes: **298664** Cap & Dipstick –Oil Filler **298665** Tube –Oil
		270306 Seal Used between Tube and Sump. **231004** Retainer–Oil Seal Used between Oil Seal and Tube.
22	**93032**	Screw–Sump Mounting Sem
23	**297229**	Flywheel–Magneto (Used after Serial No. 6308231)
23A	**297348**	Flywheel–Magneto (Used befor Serial No. 6308261)
24	**61760**	Key–Flywheel
25		**Piston Assemblies below are used after Serial No. 6306141.**
	298168	Piston Assembly–Standard
	298169	Piston Assembly–.010" O.S.
	298170	Piston Assembly–.020" O.S.
	298171	Piston Assembly–.030" O.S.
		Piston Assemblies below are used before Serial No. 6306171.
	297570	Piston Assembly–Standard
	297571	Piston Assembly–.010" O.S.
	297572	Piston Assembly–.020" O.S.
	297573	Piston Assembly–.030" O.S.

MODEL 100900 SERIES PISTON RING SETS:

Note: For Chrome Piston Ring Set–standard size–order Part No. 298744.

The following Piston

REF. NO.	PART NO.	DESCRIPTION
		Ring Sets are used after Serial No. 6306141:
26	298174	Ring Set–Std. Piston consists of: **211297** Ring, Piston, Compression, Top, 5/64" wide **211298** Ring, Piston, Compression, Center, 5/64" wide **211299** Ring, Piston Oil
	298175	Ring Set–.101" O.S. Piston, consists of: **211353** Ring, Piston, Compression, Top, .010" O.S., 5/64" wide. **211352** Ring, Piston Compression, Center, .010" O.S., 5/64" wide **211351** Ring, Piston, Oil, .010" O.S.
	298176	Ring Set–.020" O.S. Piston, consists of: **211357** Ring, Piston, Compression, Top, .020" O.S., 5/64" wide **211356** Ring, Piston, Compression, Center, .020" O.S., 5/64" wide **211355** Ring, Piston, Oil, .020" O.S.
	298177	Ring Set–.030" O.S. Piston, consists of: **211361** Ring, Piston, Compression, Top, .030" O.S., 5/64" wide **211360** Ring, Piston, Compression, Center, .030" O.S., 5/64" wide **211359** Ring, Piston, Oil, .030" O.S.
		The following Piston Ring Sets are used before Serial No. 6306171:
	297575	Ring Set–Standard Piston, consists of: **211120** Ring, Piston, Compression, Top, Standard, 3/32" wide **211121** Ring, Piston, Compression, Center, Standard, 3/32" wide **211122** Ring, Piston, Oil, Standard
	297576	Ring Set–.010" O.S. Piston, consists of: **211222** Ring, Piston, Compression, Top .010" O.S., 3/32" wide **211221** Ring, Piston Compression, Center, .010" O.S., 3/32" wide **211220** Ring, Piston, Oil, .010" O.S.
	297577	Ring Set–.020" O.S. Piston, consists of: **211227** Ring, Piston Compression, Top, .020" O.S., 3/32 wide **211226** Ring, Piston, Compression, Center, .020" O.S., 3/32" wide **211225** Ring, Piston, Oil, .020" O.S.
	297578	Ring Set–.030" O.S. Piston, consists of: **211230** Ring, Piston, Compression, Top, .030" O.S., 3/32" wide **211229** Ring, Piston, Compression, Center, .030" O.S., 3/32" wide **211228** Ring, Piston, Oil, .030" O.S.
27	260645	Lock–Piston Pin
28	297581	Pin Assembly–Piston–Standard
	297582	Pin Assembly–Piston–.005" O.S.
29	297568	Rod Assembly–Conn.
	Note:	For Connecting Rod with .020" undersize Crankpin Bore–order No. 298786.
31	221741	Lock–Conn. Rod Used after Serial No. 6503231.
	Note:	**221451** Lock–Conn. Rod Screw Used before Serial No. 6503241.
32	93450	Screw–Conn. Rod Used after Serial No. 6503231.
	Note:	**91162** Screw–Conn. Rod Used before Serial No. No. 6503241.
33	211119	Valve–Exhaust
34	261044	Valve–Intake Used after Serial No. 6911201.
	Note:	**260961** Valve–Intake Used before Serial No. 6911211
35	260552	Spring–Intake Valve
36	26478	Spring–Exhaust Valve
40	93312	Retainer–Valve Spg.
45	260642	Tappet–Valve
46	211117	Gear–Cam
	Note:	**211284** Gear–Cam Used on type Nos. 0040, 0120, 0121, 0122, 0123, 0124, 0125, 0133, 0156, 0160, 0163, 0169, 0182, 0204, 0209, 0212, 0216, 0227, 0234, 0240, 0241,

100902 To 100993

REF. NO.	PART NO.	DESCRIPTION
		0247, 0259, 0265, 0270, 0282, 0301, 0310, 0319, 0330, 0332, 0334, 0339, 0342, 400100, 400101, 400102.
52	*270070	Gasket–Intake Elbow Mounting
56	298738	Pulley–Rewind Starter Used after Serial No. 6507211.
	Note:	**294088** Pulley–Rewind Starter Used before Serial No. 6507221.
57	294303	Spring–Rewind Starter
58	66694	Rope–Rewind Starter–47-1/8" Long Used after Serial No. 6507211.
	Note:	**294584** Rope–Rewind Starter–47-1/8" Long Used before Serial No. 6507221. If longer rope is needed–order No. 66684 (used after Serial No. 6507211) or No. 66514 (used before Serial No. 6507221) and cut to required length.
59	230228	Pin–Starter Rope
60	66728	Grip–Starter Rope
61	68618	Bumper–Str. Pulley
66	298310	Clutch Assembly–Rewind Starter Used after Serial No. 6405220.
	Note:	**296468** Clutch Assy.–Rewind Starter Used before Serial No. 6405250.
67	211383	Housing–Str. Clutch Used after Serial No. 6405220.
	Note:	**210400** Housing–Starter Clutch Used before Serial No. 6405250.

* Included in Gasket Set–Part No. 297616

REF. NO.	PART NO.	DESCRIPTION
68	63770	Ball–Clutch
70	298436	Ratchet–Str. Clutch Used after Serial No. 6405220.
	Note:	**296597** Ratchet–Rewind Starter Used before Serial No. 6405250.
71	221653	Washer–Clutch Ret. Used after Serial No. 6405220.
	Note:	**221301** Washer–Clutch Retainer Used before Serial No. 6405250.
72	26032	Spring–Clutch Ret. Used before Serial No. 6405250.
73	221661	Screen–Rewind Str. Used after Serial No. 6405220.
	Note:	**220648** Screen Rewind Starter Used before Serial No. 6405250.
74	93490	Screw–Rotating Screen Mounting Sem
75	220865	Washer–Spring
76	68238	Washer–Ratchet Sealing
	Note:	**270045** Washer–Sealing Used before Serial No. 6405250 on type No. 0173.
90	297567	Carburetor Assembly
95	93385	Screw–Throttle Valve to Shaft Sem
96	211237	Valve–Throttle
97	299692	Shaft and Lever–Thr.
109	390076	Shaft, Lever and Valve–Choke
114	66594	Gasket–Needle Valve Nut
116	65978	Packing–Needle Valve
117	230590	Nut–Needle Valve
118	23433	Valve–Needle
123	93512	Screw–Intake Elbow Mounting

REF. NO.	PART NO.	DESCRIPTION
124	93367	Screw–Intake Elbow Mounting
127	22831	Plug–Welch
147	230591	Seat–Needle Valve
148	22235	Washer–Needle Valve
149	26336	Spring–Needle Valve
151	92634	Screw–Rd. Hd.–5-40 x 5/8"
152	260575	Spring–Throttle Adjustment
163	27660	Gasket–Air Cl. Mtg.
	Note:	**270488** Gasket–Air Cleaner Mounting Used on type Nos. 0250, 0269, 0275, 0287, 0290, 0296, 0307, **270730** Gasket–Air Cleaner Mounting Used on type Nos. 0335, 0346.
180	297257	Tank Assembly–Fuel
181	298425	Cap–Fuel Tank
	Note:	**297863** Cap–Fuel Tank Used on type Nos. 0173, 0266. **298376** Cap–Fuel Tank Used on type Nos. 0134, 0140, 0152.
190	93341	Screw–Fuel Tank Mounting
191	*270073	Gasket–Fuel Tank Mounting
200	221480	Guide–Air (Used after Serial No. 6308231)
200A	221508	Guide–Air (Used before Serial No. 6308261)
201	260649	Link–Governor
202	260654	Link–Throttle
209	260703	Spring–Governor (For 4000 RPM Top Speed Setting)
	Note:	**260711** Spring–Governor (For 3300 RPM Top Speed Setting) Used on type Nos. 0015, 0016, 0017,

* Included in Gasket Set–Part No. 297616

REF. NO.	PART NO.	DESCRIPTION
		0040, 0131, 0132, 0134, 0135, 0136, 0138, 0140, 0144, 0145, 0146, 0148, 0151, 0152, 0154, 0158, 0159, 0161, 0163, 0166, 0168, 0170, 0172, 0173, 0176, 0181, 0182, 0183, 0185, 0186, 0187, 0190, 0191, 0195, 0198, 0199, 0200, 0201, 0202, 0203, 0204, 0206, 0209, 0210, 0217, 0219, 0220, 0222, 0223, 0224, 0225, 0227, 0228, 0232, 0238, 0239, 0244, 0245, 0248, 0249, 0253, 0258, 0260, 0261, 0262, 0263, 0264, 0265, 0267, 0268, 0269, 0272, 0273, 0274, 0275, 0276, 0277, 0279, 0282, 0285, 0287, 0290, 0291, 0292, 0294, 0295, 0296, 0297, 0298, 0299, 0300, 0301, 0302, 0308, 0309, 0310, 0312, 0313, 0315, 0321, 0322, 0324, 0325, 0326, 0327, 0331, 0334, 0335, 0339, 0340, 0341, 0342, 0344, 0346, 0347, 400020, 400024, 400025, 400026, 400027, 400033, 400038, 400044, 400045, 400053, 400055, 400058, 400059, 400062, 400065, 400066, 400068, 400071, 400074, 400075, 400076, 400081, 400090, 400092, 400099.
		261047 Spring—Governor (For 2900 to 3100 RPM Top Speed—No Load) Used on type Nos. 0199, 0303, 0304, 0305, 0306, 0307, 0316, 0318, 0337, 0338, 0345.
		261108 Spring—Governor (For 2600 RPM Top Speed Setting) Used on type No. 0329.
219	**297249**	Oil Slinger Gear, Governor and Bracket
227	**297583**	Lever Assembly—Governor
229	**220680**	Washer—Gov. Lever
230	**221559**	Washer—Gov. Lever
265	**22372**	Clamp—Casing
	Note:	For clamp mounted with cylinder head screw—order No. 221534
267	**93469**	Screw—Clamp Mtg.
268	**66986**	Casing—Control Wire—48" Long
	Note:	If longer casing is needed, specify length in inches; if a shorter casing is needed order No. 66986 and cut to required length.
269	**26099**	Wire—Control, 54" Long
	Note:	If longer wire is needed, specify length in inches; if shorter wire is needed order No. 26099 and cut to required length.
270	**63426**	Locknut—Control Wire Casing
271	**290568**	Lever Assembly—Control
300	**297274**	Muffler—Exhaust (Side Outlet)
	Note:	**294441** Muffler—Exhaust Used on type No. 0339.
		294599 Muffler—Exhaust Used on type Nos. 0136, 0154, 0179, 0180, 0185, 0190, 0191, 0194, 0196, 0204, 0212, 0213, 0214, 0215, 0221, 0252, 0257, 0270, 0282, 0288, 0304, 0318, 0324, 400020, 400053, 400059, 400079, 400083, 400095,
		297506 Muffler—Exhaust (Direct Outlet) Used on type Nos. 0035, 0037, 0038, 0133, 0137, 0141, 0145, 0146, 0149, 0163, 0170, 0175, 0177, 0186, 0189, 0197, 0206, 0211, 0233, 0241, 0272, 0273, 0280, 0289, 0295, 0311, 0319, 0320, 0321, 0330, 0332, 0345, 400025, 400026, 400027, 400028, 400031, 400038, 400039, 400042, 400043, 400048, 400050, 400055, 400056, 400064, 400065, 400078, 400085, 400087, 400092, 400093.
302	**91242**	Locknut—Muffler and Elbow
	Note:	**220859** Locknut—Muffler Used on type No. 0339.

100902 To 100993

REF. NO.	PART NO.	DESCRIPTION
303	91464	Elbow–Muffler, 90 Degree, Street
	Note:	**91219** Elbow–Exhaust–45 Degree Street Used on type Nos. 0214, 0221, 0252. **91464** Elbow–Exhaust–90 Degree, Street Used on type Nos. 0252, 0257.
304	297596	Housing–Blower (For Rewind Starter)
	Note:	**297597** Housing–Blower (For Rewind Starter) Used on type Nos. 0131, 0136, 0140, 0150, 0153, 0154, 0157, 0165, 0192, 0195, 0228, 0249, 0293, 0295, 400020, 400053, 400059, 400068, 400069, 400080, 400084, 400098, 400103, 400106. **297631** Housing–Blower (For Rewind Starter) Used on type Nos. 0130, 0137, 0144, 0151, 0159, 0164, 0168, 0171, 0179, 0185, 0186, 0187, 0193, 0197, 0202, 0203, 0208, 0214, 0215, 0217, 0224, 0226, 0232, 0254, 0256, 0257, 0258, 0260, 0265, 0268, 0288, 0290, 0296, 0304, 0319, 0324, 400022, 400045, 400048, 400052, 400062, 400071, 400077, 400081, 400083, 400085, 400094, 400095, 400099. **297634** Housing–Blower (For Rewind Starter) Used on type Nos. 0132, 0143, 0161, 0163, 0188, 0196, 0200, 0216, 0218, 0223, 0227, 0240, 0241, 0262, 0263, 0267, 0279, 0284, 0298, 0300, 0312, 0314, 0322, 0324, 0325, 0327, 0335, 0338, 0339, 0340, 0347, 400029, 400049, 400061, 400096, 400105, 400108. **297636** Housing–Blower (For Rewind Starter) Used on type Nos. 0199, 0225, 0286, 0292, 0308, 0313, 0316, 0318, 0321, 0341, 0342, 0343, 0345. **297742** Housing–Blower (For Rewind Starter) Used on type Nos. 0152, 0173, 0207, 0221, 0238, 0252, 0275, 0281, 0303, 0307, 0311, 0317, 0333, 400044, 400076. **297992** Housing–Blower (For Rewind Starter) Used on type Nos. 0248, 0250, 0251, 0289, 0295, 0337. **298028** Housing–Blower (For Rewind Starter) Used on type Nos. 0138, 0198, 0248, 0269, 0287, 400075.
305	93158	Screw–Tank Brkt. Mounting Sem
306	221484	Shield–Cylinder
307	93042	Screw–Cylinder Shield Mounting Sem
308	221452	Cover–Cylinder Head
303	298316	Armature–Magneto Used after Serial No. 6308231)
333A	297594	Armature–Magneto (Used before serial No. 6308261)
334	93014	Screw–Air Guide Mounting Sem
335	93414	Screw–Armature Mounting Sem
335A	93215	Screw–Armature Mounting Sem
336	297250	Cable–Ignition (Used before serial No. 6208220. Cables used after this serial number are integral with the ignition coil.)
337	298809	Plug–Spark (with gasket) (1-1/2" High–38 M. M.)
	Note:	Spark Plugs **298809**, **29693**, **293918** use Ignition Cable Terminal No. 221798. **29693** Plug–Spark (with gasket) (2" High–51 M. M.) **293918** Plug–Spark (with gasket) Used on type No. 0208.
340	26018	Spring–Breaker Arm
341	93381	Screw–Breaker Arm Mounting Sem
342	65704	Plunger–Breaker Point
344	93042	Screw–Condenser Clamp Mounting Sem
345	220366	Cover–Breaker Point and Condenser
346	93014	Screw–Sem
356	298479	Wire–Ground
	Note:	**298581** Wire–Ground

REF. NO.	PART NO.	DESCRIPTION
		Used on type No. 0325.
358	297616	Gasket Set
372	220477	Clamp–Condenser
375	294628	Breaker Points and Condenser Set
	Note:	**299061** Ignition Kit Includes: **294628** Point Set **65704** Plunger **61760** Key–Flywheel
377	93065	Key–Woodruff No. 6
392	260455	Spring–Fuel Pump Diaphragm
394	270026	Diaphragm
408	93537	Screw–Sem
409	299509	Housing–Speed Control
410	260948	Link–Speed Control
432	221377	Cap–Spring
433	93265	Pin–Diaphragm Cover
434	210959	Cover–Diaphragm
435	93141	Screw–Diaphragm Cover
454	296178	Housing–Fuel Pipe Screen (For 3/16" O.D. Pipe)
516	260374	Spring–Connector
527	93376	Clip–Breather Pipe
528	230717	Tube–Breather
529	67608	Grommet–Breather Tube
534	93374	Screw–Air Cleaner
	Note:	**63949** Stud–Air Cleaner **92067** Nut–Wing Used on type Nos. 0335, 0346. **93547** Screw–Air Cleaner Used on type Nos. 0267, 0268, 0298, 0315.
535	270067	Element–Air Cleaner
	Note:	**270209** Element–Air Cleaner Uses: **221969** Support–Air Cleaner **280015** Cup–Air Cleaner Used on type Nos. 0267, 0268, 0298, 0315. **390492** Element–Air Cleaner Uses: **221969** Support–Air Cleaner **390588** Cover–Air Cleaner Used on type Nos. 0335, 0346.
536	297595	Cleaner Assembly–Air
	Note:	**299593** Cleaner Assembly–Air Used on type Nos. 0267, 0268, 0298, 0315.
552	230735	Bushing–Governor Shaft
562	92613	Bolt–Governor Lever
592	90356	Nut–Hex.–10-24
594	93559	Screw–Blower Housing Mtg. Sem
608	297259	Starter Assy.–Rewind
609	260029	Spring–Throttle Link
612	296811	Pipe–Fuel (Plastic)
613	93377	Screw–Muffler Mounting
614	93306	Cotter–Hair Pin
615	93307	Retainer–E-Ring
616	230714	Crank–Governor
617	270074	Seal–Intake Elbow Tube
618	260648	Spring–Choke Return
619	93380	Screw–Control Plate Mounting
620	297548	Plate Assembly–Carburetor Control
	Note:	**297457** Plate Assembly–Carburetor Control Used on type Nos. 0015, 0016, 0017, 0040, 0110, 0111, 0112, 0120, 0121, 0122, 0131, 0134, 0135, 0136, 0140, 0142, 0143, 0144, 0146, 0147, 0151, 0154, 0155, 0158, 0159, 0162, 0164, 0166, 0167, 0168, 0176, 0180, 0181, 0184, 0188, 0189, 0195, 0196, 0203, 0209, 0210, 0211, 0212, 0213, 0214, 0215, 0221, 0231, 0238, 0239, 0242, 0251, 0252, 0253, 0255, 0261, 0274, 0276, 0282, 0283, 0287, 0288, 0291, 0292, 0293, 0294, 0313, 0317, 0318, 0327, 0333, 400015, 400016, 400017, 400020, 400022, 400024, 400032, 400034, 400037, 400038, 400039, 400040, 400045, 400047, 400052, 400053, 400054, 400055, 400057, 400058, 400059, 400061, 400062, 400063, 400066, 400067, 400071, 400081, 400083, 400088, 400090, 400094, 400099, 400100, 400101, 400102, 400108. **391091** Plate Assembly–Carburetor Control Used on type No. 0199.
621	297472	Switch–Stop
622	260676	Washer–Spring (Used between cam gear boss and oil slinger bracket)
623	93566	Screw–Shoulder
624	297252	Lever–Linkage
625	297254	Elbow and Tube–Intake
634	270167	Washer–Throttle Shaft (Felt)
635	66538	Elbow–Spark
665	296768	Oil Minder
681	299060	Needle Valve Kit

100902 To 100993

ORIGINAL

BRIGGS & STRATTON

SERVICE PARTS ®